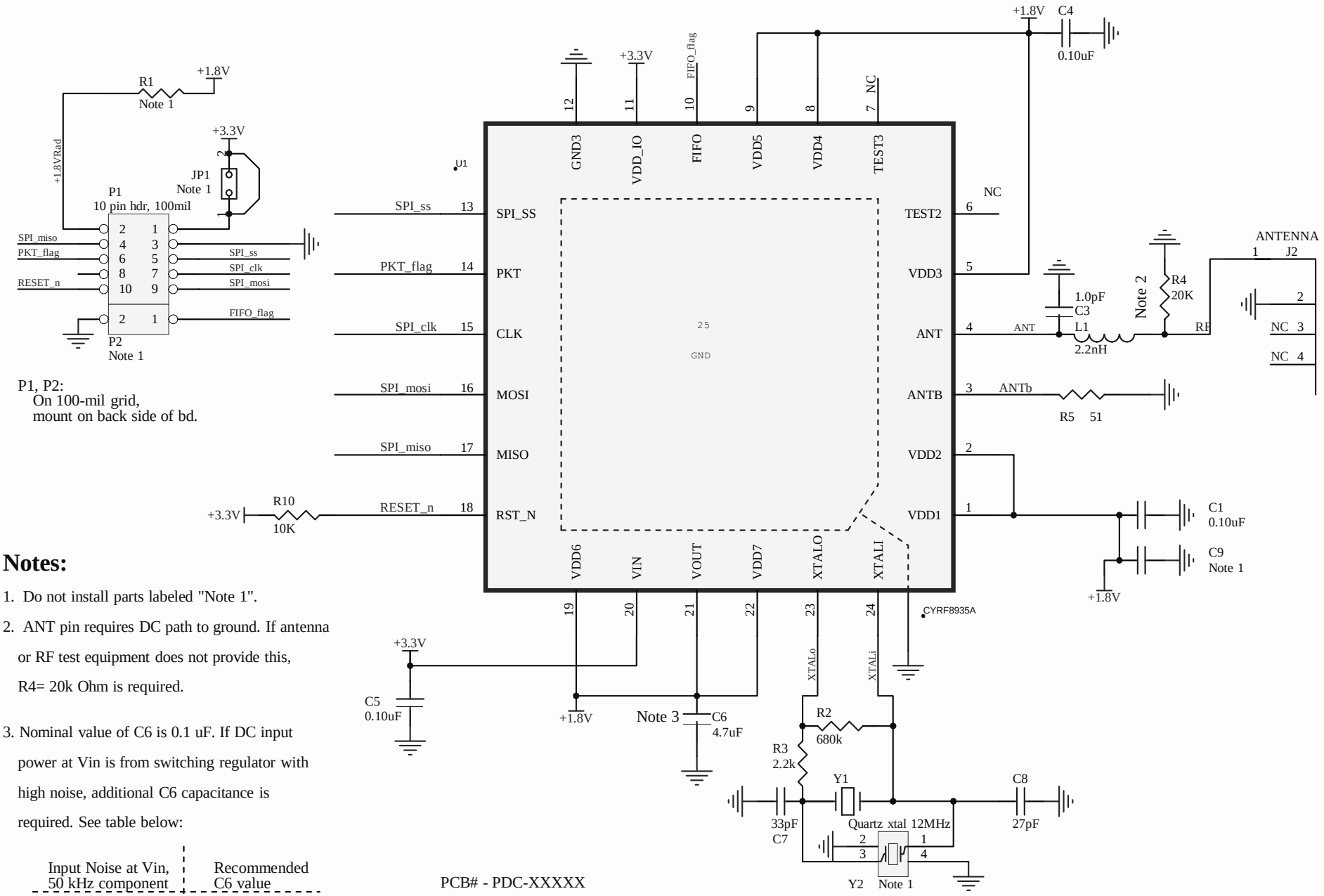

Notes:

1. Do not install parts labeled "Note 1".
2. ANT pin requires DC path to ground. If antenna or RF test equipment does not provide this, R4= 20k Ohm is required.
3. Nominal value of C6 is 0.1 uF. If DC input power at Vin is from switching regulator with high noise, additional C6 capacitance is required. See table below:

Input Noise at Vin, 50 kHz component	Recommended C6 value
< 10 mV pk.	0.10uF
10 to 50 mV pk.	4.7uF
50 to 100 mV pk.	2x 4.7uF

PCB# - PDC-XXXXX

Assembly# - 120-XXXXX-X

Schematic# - REF-XXXXX

Title: RF Module Board NL, 24-pin		
Size: A	Number: REF-15109	Revision: 1
Date: 11/23/2011		Sheet 1 of 1
File: D:\JOBS\..\NL_24PIN_MOD_ANTENNA_BRD_REV 1_1123-FIANL-1.SchDoc		Drawn By: